REV. NO.	ZONE	DESCRIPTION		DATE	NAME
50001843		NEUEINFUEHRUNG	*INTRODUCTION*	2020-12-17	BORSTA

SAMPLING AND RELEASE ACCORDING TO HQ-G-C2-04 AND NMA SUPPLIER MANUAL

SPECIAL CHARACTERISTIC	*QUANTITY*
SRC	0
SC	0
FC	0
CD [CD]	0

DREHRICHTUNG
DIRECTION OF ROTATION

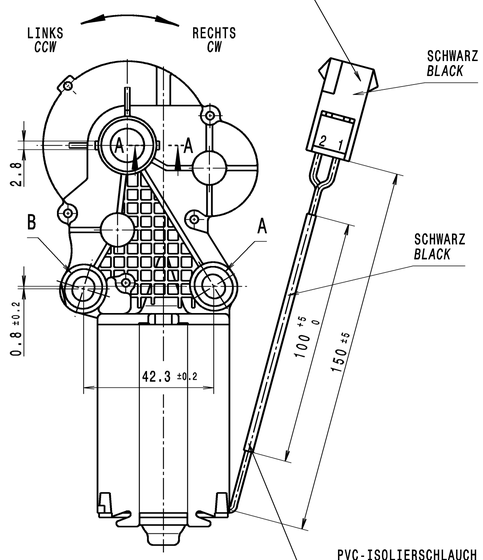

STECKER AMP 365057-3
KONTAKTE AMP 928781-5
(GEGENSTECKER AMP 365058-1)
(GEGENKONTAKTE AMP 927768-1)

TERMINAL AMP 365057-3
CONTACT AMP 928781-5
(MATCHING PLUG AMP 365058-1)
(OPPOSITE CONTACT AMP 927768-1)

SCHWARZ
BLACK

SCHWARZ
BLACK

PVC-ISOLIERSCHLAUCH SWF 12.977
5x0.6 SCHWARZ
ENGANLIEGEND UMHUELLEND
PVC-INSULATING SLEEVE SWF 12.977
5x0.6 BLACK
LIMITING POSITION SHEATED

ELEKTRISCHE LEITUNG
DIN 72551-FLRY-1.5-A

ELECTRICAL LEAD
DIN 72551-FLRY-1.5-A

Y
2:1

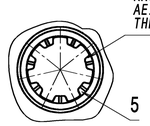

KRC PROFIL 316928
AEIZ 01
DURCHGEHEND
KRC PROFILE 316928
AEIZ 01
THROUGH

A-A
5:1

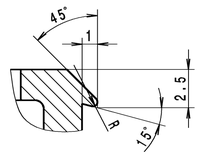

X
2:1

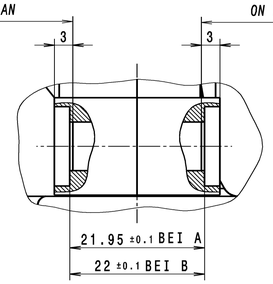

* MASS AN DIESER FLAECHE GEMESSEN
* *DIM. MEASURED ON THIS PLAN*

** MASS AN DIESER FLAECHE GEMESSEN
** *DIM. MEASURED ON THIS PLAN*

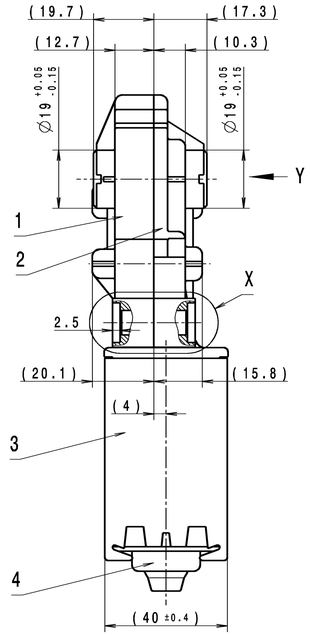

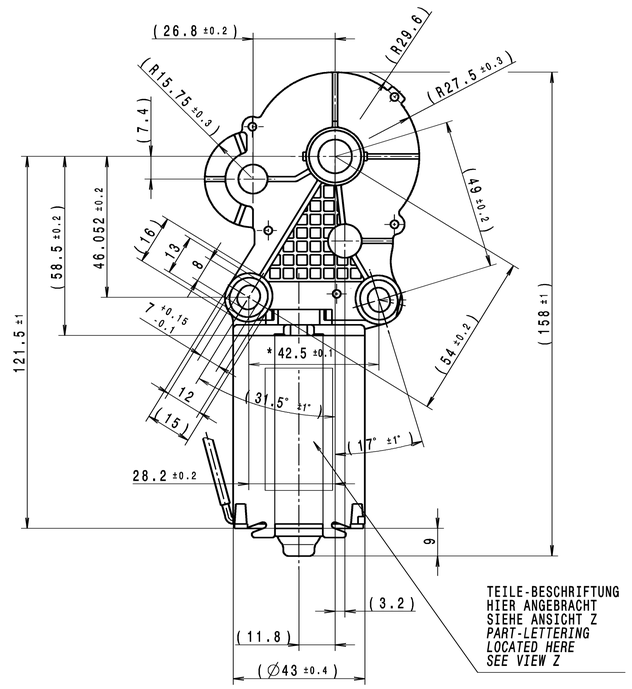

TEILE-BESCHRIFTUNG
HIER ANGEBRACHT
SIEHE ANSICHT Z
PART-LETTERING
LOCATED HERE
SEE VIEW Z

POS. *ITEM.*	BENENNUNG *TITLE*	WERKSTOFF *MATERIAL*
1	GETRIEBEGEHAEUSE *GEAR HOUSING*	PET 45% GF
2	DECKEL *COVER*	PET 45% GF
3	MOTORGEHAEUSE *MOTOR HOUSING*	St 02 Z275 A
4	LAGERDECKEL *BEARING CAP*	St 05 Z200 B
5	ZAHNRAEDER *GEAR WHEELS*	POM

KENNLINIE / *CHARACTERISTIC*

PRUEFSPANNUNG 27 V ± 1V / *TESTVOLTAGE 27 V ± 1V*
GEMESSEN MIT Rv=0.2 OHM
MEASURED WITH Rv=0.2 OHM

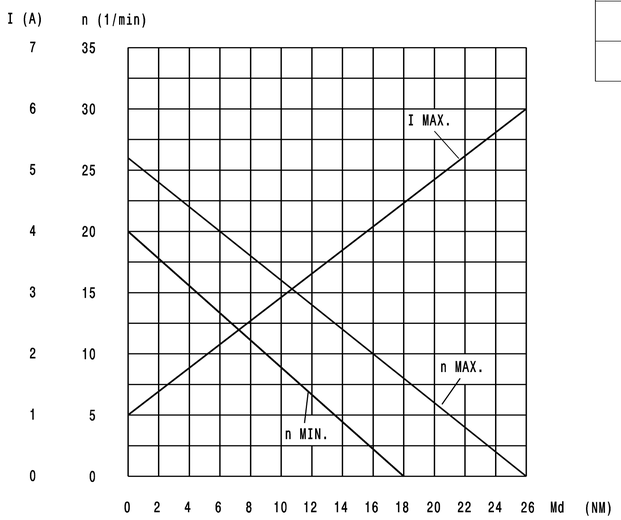

SCHALTBILD MOTOR
CIRCUIT DIAGRAM MOTOR

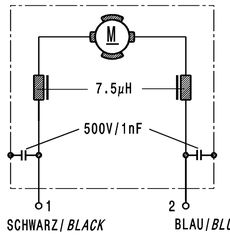

LINKSLAUF BEI + AUF 1
- AUF 2
RECHTSLAUF BEI + AUF 2
- AUF 1

CCW ROTATION WITH + TO 1
- TO 2
CW ROTATION WITH + TO 2
- TO 1

A) ALLGEMEINES

1.NENNSPANNUNG UN = 24 V
2.PRUEFSPANNUNG UP = 27±1 V DC
3.LEERLAUFDREHZAHL n0 = 20 - 26 min-1
4.LEERLAUFSTROM I0 = 1 A

B) MITGELTENDE UNTERLAGEN

1.ALLG. SPEZIFIKATION INDUSTRIEMOTOREN NIDEC
NACH SWF 46.402 (AUSGABE VOM 07.01.2010)
DARUEBERHINAUS GEHENDE ANFORDERUNGEN
HAT DER KUNDE DURCH PRUEFUNGEN IM SYSTEM SICHERZUSTELLEN
HIERFUER UEBERNIMMT NIDEC KEINE HAFTUNG

A) GENERAL

1.NOMINAL VOLTAGE UN = 24 V
2.TEST VOLTAGE UP = 27±1 V DC
3.NO LOAD SPEED n0 = 20 - 26 min-1
4.NO LOAD CURRENT I0 = 1 A

B) GENERAL DATAS

1.GEN. SPECIFICATION INDUSTRIAL MOTORS NIDEC
ACC. SWF 46.402 (EDITION AT 07.01.2010)
ADDITIONAL REQUIREMENTS, WHICH ARE NOT CONTENT OF THE
ABOVE SPECIFICATION, HAVE TO BE SECURED BY THE CUSTOMER
FOR THIS ADDITIONAL REQUIREMENTS NIDEC CAN TAKE NO PRODUCT LIABILITY

Z

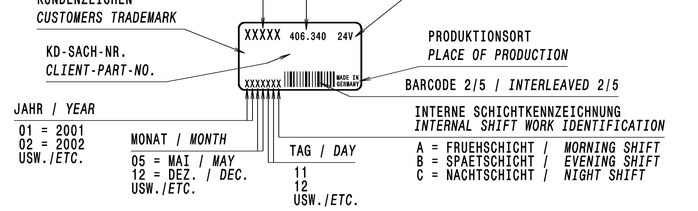

SCHRIFT: SCHWARZ
KLEBEBLATT: SILBER
LETTER: BLACK
ADHESIVE PLAQUE: SILVER

LIMIT DIMENSIONS FOR NOMINAL SIZE RANGES IN mm	...6	>6...30	>30...120	>120...400	>400...1000
TOLERANCES FOR NOMINAL SIZE RANGES IN mm ±	0,1	0,2	0,3	0,5	0,8
LIMIT DIM. FOR NOMINAL SIZE RANGES IN DEGREE/ MINUTE (SHORTER ANGLE SIDE)	...10	>10...50	>50...100	>100	
TOLERANCES FOR NOMINAL SIZE RANGES ±	1°	30'	20'	10'	

SURFACE FINISH ACC. TO SWF 00.051 — *NORM FOR SURFACE FINISH*
SURFACE TEXTURE ACC. TO DIN EN ISO 1302 — *EDGES ACC. TO ISO 13715*
GEOMETRICAL PRODUCT SPECIFICATIONS (GPS) SIZE ISO 14405 (E) — *GEOM. TOLERANCING ACC. TO DIN EN ISO 1101*
STOCK MATERIAL
CUSTOMER REFERENCE NO.
MATERIAL SPECIFICATION ACC. TO SWF 10.XXX — *NORM FOR MATERIAL SPECIFICATION*

MATERIAL NO. **406-340-99-99** — *OLD SPAIN MATERIAL NO.* — *REFERENCE NO.*

ALL DIMENSIONS IN mm

SCALE 1:1

RELEASE-LEVEL RELEASED

TITLE
MOTOR GMPG
GEAR-MOTOR GMPG

ARTICLE NO. **0225**

DT	*DOCUMENT NO.*	*VERSION*	*SHEET*	*OF*	*FORMAT*
A	10000036782	00	1	1	A1

	DATE	*NAME*
DRAWN	17.12.2020	STERNBACHA
CHECKED	24.03.2021	BRUHNR
RELEASED	24.03.2021	MEISSNERI

NIDEC MOTORS & ACTUATORS
GERMANY / POLAND / SPAIN

SUB. FOR

ITEM	*MATERIAL NUMBER*	*QUANT.*	*TITLE*	*DOCUMENT NO.*

COPYRIGHT RESERVED DIN ISO 16016 © Nidec

COMPUTER DRAWING PLOTTED AT